TREVOR R HOWSE

23 January 2009

Our Ref: J28290-2

Circus Royale
PO Box 1448
GEELONG, VIC, 3220

Email: circus@circusroyale.com.au
Attention: Mr Damian Syred

Dear Madam,

Re: Circus Royale
Place of Public Entertainment report

Further to your recent discussions with the undersigned, please find attached our Completed reports prepared in respect of the aforementioned project.

Should you require any further information, please do not hesitate to contact me on the number provided.

Yours faithfully

Kate Howse
Senor Consultant
Trevor R. Howse & Associates Pty. Limited

Encl.

PLACE OF PUBLIC ENTERTAINMENT

PREPARED FOR

Circus Royale

REGARDING

Circus Royale –
Temporary Place of Public Entertainment

Trevor R Howse & Associates Pty Ltd ABN 24 003 753 839
Level 8, 210 George Street, Sydney NSW 2000 PO Box N694, Grosvenor Place, NSW 1220
Telephone +612 9251 4500 Facsimile +612 9252 9822 Email trh@trh.com.au www.trh.com.au

Building Regulations
Fire Safety Engineering
Management Services

REPORT REGISTER

The following report register documents the development and issue of this report and project as undertaken by this office, in accordance with the *Quality Assurance* policy of **Trevor R Howse & Associates Pty Ltd**.

Our Reference	Issue No.	Remarks	Issue Date
J28290	– 1	Completed report issued to client	15.12.2008

CONTENTS PAGE

ANNEXURES

Annexure "A"	**–**	**Alternative Building Solution**
Annexure "B"	**–**	**Emergency Evacuation & Management Procedures**
Annexure "C"	**–**	**Architectural (part) Plans**

1.0 INTRODUCTION

1.1 GENERAL

This "Place of Public Entertainment" report has been prepared at the request of Circus Royale, and relates to the proposed temporary Place of Public Entertainment structure, the Circus Royale.

This report is based upon and limited to, the information depicted in the documentation provided for assessment, and does not make assumptions regarding "design intention" or the like.

From this documentation, it is understood that the proposed development encompasses –

(a) The erection of a temporary tent structure, incorporating internal demountable tiered seating

1.2 REPORT BASIS

The content of this report reflects –

(a) Regulation 98C and Schedule 3A in the Environmental Planning & Assessment Regulation 2000 (EP&A Regulation);

(b) The Building Code of Australia 2008 (BCA 2008);

(c) Architectural documentation provided by Circus Royale (refer Annexure "C").

1.3 EXCLUSIONS

It is conveyed that this report should not construed to infer that an assessment for compliance with the following has been undertaken –

(a) Structural and services design documentation;

(b) General building services (i.e. passenger lifts);

(c) The individual requirements of service providers (i.e. Telstra, Sydney Water, Energy Australia);

(d) The individual requirements of the WorkCover Authority;

(e) Those provisions of BCA 2008 not relevant to temporary places of public entertainment;

(f) Disability Discrimination Act 1992 (DDA).

1.4 REPORT PURPOSE

Temporary places of public entertainment must comply with the applicable provisions of Regulation 98C, as contained within the EP&A Regulation.

This report has been prepared to identify the extent to which the proposed design documentation complies with the relevant provisions of this Regulation, as also activates Schedule 3A from the EP&A Regulation and Parts B1 and H102 of BCA 2008.

Assessment of the proposed design considers each of the relevant requirements, and identifies such as either –

(a) Being complied with; or

(b) Not being complied with; or

(c) Requiring the provision further detail; or

(d) Not being relevant to the particular building works proposal.

The status of the design, in terms of these four (4) categories, is summarised within Part 3 of this report.

Where prescriptive non-compliance is identified, suitable recommendations to remedy the non-compliance shall be detailed in Part 4.

In instances where insufficient detail exists, summary of the information required from the project team shall also be outlined in Part 4.

2.0 BUILDING DESCRIPTION

2.1 GENERAL

In the context of the Building Code of Australia (BCA), the subject development is described within items 2.2 – 2.6 below.

2.2 RISE IN STOREYS (CLAUSE C1.2)

Having a rise in storeys of one (1)

2.3 BUILDING CLASSIFICATION (CLAUSE A3.2)

Being of single classification, namely: –

(a) Class 9b – Assembly

2.4 EFFECTIVE HEIGHT (CLAUSE A1.1)

Having an effective height not exceeding 25 metres.

2.5 TYPE OF CONSTRUCTION (TABLE C1.1)

Based upon the rise in storeys and classification contained within the building, compliance is required with the fire rating requirements of Type C Construction.

2.6 FLOOR AREA AND VOLUME LIMITATIONS

(a) The building is subject to the following maximum fire compartment floor area and volume limits for Type C Construction: –

❑	Class 9b	–	Floor area	–	3,000 m^2
		–	Volume	–	18,000 m^3

3.0 POPE ASSESSMENT – SUMMARY

3.1 GENERAL

The tables contained within items 3.2 – 3.5 below summarise the compliance status of the proposed design in terms of Regulation 98C and Schedule 3A of the EP&A Regulation, and Parts B1 and H102 of BCA 2008.

For those instances of either "prescriptive non-compliance" or "insufficient detail", a detailed analysis and commentary is provided within Part 4.

3.2 REGULATION 98C – CONDITIONS APPLYING TO USE OF BUILDINGS AS POPE

EP&A Regulation reference	Complies	Does not comply	Detail required	Not relevant
Sub-clause (1)				✓
Sub-clause (2)			✓	
Sub-clause (3)				✓
Sub-clause (4)			✓	
Sub-clause (5)				✓

3.3 SCHEDULE 3A – PLACES OF PUBLIC ENTERTAINMENT

EP&A Regulation reference	Complies	Does not comply	Detail required	Not relevant
Sub-clause 1 – dangerous entertainment				✓
Sub-clause 2 – stage management				✓
Sub-clause 3 – proscenium safety curtains				✓
Sub-clause 4 – projection suites				✓
Sub-clause 5 – marking of aisles and cross-overs				✓
Sub-clause 6 – seating in rows			✓	
Sub-clause 7 – seating in paths to designated exit	✓			
Sub-clause 8 – aisle lights to be on			✓	
Sub-clause 9 – locks				✓
Sub-clause 10 – rope barriers				✓
Sub-clause 11– emergency evacuation plans	✓			
Sub-clause 12 – council may require fire safety info				✓
Sub-clause 13 – upholstery, curtains or blinds	✓			

3.4 PART B1 – STRUCTURAL PROVISIONS

BCA reference	Complies	Does not comply	Detail required	Not relevant
B1.1 – resistance to actions			✓	
B1.2 – determination of individual actions			✓	
B1.3 – loads			✓	
B1.4 – materials and form of construction			✓	

3.5 PART H102 – TEMPORARY STRUCTURES

BCA reference	Complies	Does not comply	Detail required	Not relevant
H102.3 – location of exits	✓			
H102.4 – exits to be provided			✓	
H102.5 – vertical clearances for exits			✓	
H102.6 – curtains across exits				✓
H102.7 – curtains and blinds	✓			
H102.8 – fabrics			✓	
H102.9 – guardrails			✓	
H102.10 – seating			✓	
H102.11 – sanitary accommodation			✓	
H102.12 – projection suites				✓
H102.13 – fireplaces and heating				✓
H102.14 – electrical services			✓	
H102.15 – artificial lighting			✓	
H102.16 – exit signs			✓	
H102.17 – fire-fighting services			✓	

4.0 POPE ASSESSMENT – DETAILED ANALYSIS

4.1 GENERAL

With reference to the "POPE Assessment Summary" contained within Part 3 above, the following detailed analysis and commentary is provided.

This commentary is formulated to enable the design documentation to be further progressed, for the purpose of evidencing the attainment of compliance with the relevant provisions of Regulation 98C of the EP&A Regulation.

4.2 REGULATION 98C – CONDITIONS APPLYING TO USE OF BUILDINGS AS POPE

SubCl. (2) Refer Items 4.4 and 4.5 of this report below.

SubCl. (4) A sign must be displayed in a prominent position in the tent that specifies the following: –

- the maximum number of persons that are permitted in the tent; and
- the name, address and telephone number of the council of the area in which the tent is located.

4.3 SCHEDULE 3A – PLACES OF PUBLIC ENTERTAINMENT

Cl. 6 Refer Item 4.5 of this report below.

Cl. 8 Aisle lighting must be maintained in the on-position whenever the building is publicly occupied and the main lighting is dimmed

Cl. 11 An emergency evacuation plan must be implemented during the use of the building, and must: –

- The location of exits and fire protection equipment
- The number of safety officers present during a performance
- Methodology for how the occupants are evacuated in an emergency

Safety officers must be appropriately trained.

Cl. 13 Refer Item 4.5 of this report below.

4.4 PART B1 – STRUCTURAL PROVISIONS

Cl. B1.3 Structural elements must accord with –

- Dead & Live Loads and Load Combinations – AS 1170.1–1989
- Wind Loads – AS 1170.2–1989

Cl. B1.4 Materials and forms of construction must comply with the following –

- Steel – AS 4100–1998

4.5 PART H102 – TEMPORARY STRUCTURES

Cl. H102.4 Based upon a peak occupant load within the tent structure of 750 persons, a total of five (5) exits with an aggregate exit width of 7,500-mm must be provided around the perimeter of the building
The temporary structure has been provided with four (4) exits with and aggregate exit width of 9,000-mm. A performance verification report has been prepared for this issue.

Cl. H102.5 A clear unobstructed height not less than 2000-mm must be maintained to the exits

Cl. H102.7 Curtains or blinds used within the tent structure must have a flammability index not greater than 6

Cl. H102.8 The tent fabric must have a flammability index not greater than 6

Cl. H102.9 Guardrails of minimum 750-mm height must be provided to the sides and rear of steeper platforms and seating areas

Cl. H102.10 The position and installation of seating must accord with NSW H101.11.

Cl. H102.11 Sanitary facilities must be provided in close proximity to the proposed tent, and be of a sufficient number to accommodate the proposed population

Cl. H102.14 Electrical installations must comply with local authority requirements, AS 3002, and AS/NZS 3000

Cl. H102.15
- ❑ Artificial lighting switches must be in accessible to members of the public, and instantly re-light via an override button if having a dimming capacity
- ❑ Emergency lighting must be provided and have a minimum 0.2 lux, and have a minimum 30-minute battery supply

Cl. H102.16 Exit signs must be provided above the exits

Cl. H102.17 AS 2444 compliant portable fire extinguishers should be provided throughout, in areas accessible to staff

Author

Kate Howse
Senior Consultant
Trevor R. Howse & Associates Pty Limited

ANNEXURE “A”

EMERGENCY EVACUATION PROCEEDURE

Circus Royale Big Top (Tent) Evacuation Procedure

Evacuation Plan as Victorian Building Commission Occupancy permits

Objectives

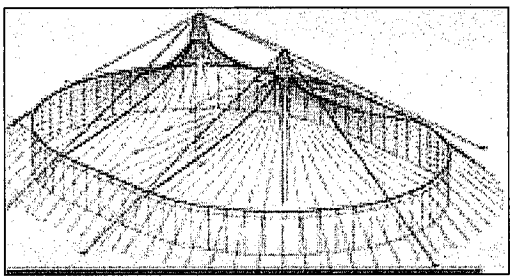

Eliminate risk of harm befalling people in big top tent, or on circus location

1. Ticket holding Patrons
2. Guests on invitation
3. Circus Employees & extended families
4. Circus Volunteers

Eliminate risk of harm befalling any animal on circus location

Eliminate risk of property damage

1. Circus tenting & equipment
2. Circus living compound
3. Circus transport & trailers
4. Patron cars

Chain of command

Principal
General Manager

Safety Officer
Lead Fire Fighter
Minute Keeper
Runner
Registered Nurse

All Events
All Emergencies

Circus Director (Principal) will control and direct events
General Manager will control if Director absent
Safety Officer is Big Top Supervisor
Lead Fire Fighter established
Minute Keeper established
Runner established
Principal will decide when emergency is over.
All employees to remain on site until Principal states emergency is satisfactorily dealt with.

Alarm Raising **000**	The alarm will be raised by means of a siren, which is located on light and sound operation station. Any employee can raise the alarm Alarm is tested at each location on set up day (Police, Ambulance, Fire, Council notification of alarm test not undertaken as sound is restricted to boundaries of circus location)
Actions 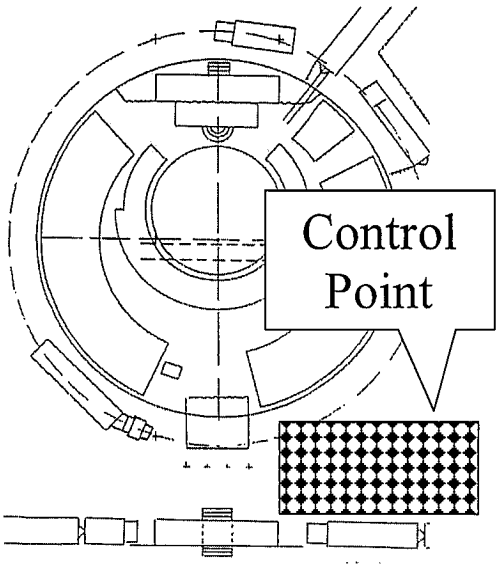 	On sounding of alarm Principal commences evacuation of big top procedures. General Manager telephones emergency services Control Centre established on righthand side of big top entrance area Minute keeper reports to Control Centre area to keep a record of date, time, and all pertinent information on event Runner reports to Control Centre area to carry messages as directed by Principal Staff Nurse to Control Point Employees carry out rehearsed evacuation of big top tent procedure. Each usher is responsible for a portion of patrons in section of seating Ushers report to Principal in Control Centre when all patrons have left section of seating Ushers then undertake duties as given by Principal
Fire Fighting	In the event that the emergency is caused by a fire. The Lead Fire Fighter and designated fire crew will proceed to quell fire or continue to fight fire until arrival of fire services Lead Fire Fighter liases with Fire Services Principal establishes a watching roster for as long as deemed necessary
Roll Call	All persons to remain in Control Area until Principal advises emergency is over Roll Call - circus persons Roll Call – animals
Debriefing 	Principal convenes debriefing within 2 hours of emergency Minute Keeper records details 1. The cause of emergency 2. Actions required to prevent reoccurrence 3. Any flaws / difficulties identified in evacuation procedures 4. Nominees role inadequacies Minute Keeper to prepare a full written report for Emergency Services if required

Established Duty Officers	
Safety Officer	Safety Officer is employed full time Safety Officer is present on circus location 1. 60 minutes prior to patrons arrival 2. Full duration of performances 3. 30 minutes after performance conclusion Safety Officer ensures 1. Ushers 2. Catering staff 3. Concessionaires 4. Stage hands Regularly practice evacuation procedure and correct use of fire extinguishers
Leading Fire Officer	Leading Fire Officer will be 1. Familiar with all fire equipment on site 2. Arrange regular servicing 3. Train new staff as necessary
Registered Nurse	Registered Nurse is employed full time Registered Nurse is present on circus location 2. 60 minutes prior to patrons arrival 2. Full duration of performances 4. 30 minutes after performance conclusion Registered Nurse supervises all First Aid Fixed First Aid point located in Booking Office at main entrance to circus. Mobile First Aid kit located in big top tent.

Established Routines	
Catering Outlets	Following the sounding of emergency alarm Catering Manager will commence closure of circus snack bar 1. All electrical off 2. All gas off 3. Shutters closed and locked down
Animal Department	Following the sounding of emergency alarm Animal Husbandry Manager and Groom will commence loading of livestock into semi stable trailer in preparation for evacuation

ANNEXURE “B”

ARCHITECTURAL DOCUMENTATION

Vista frontale

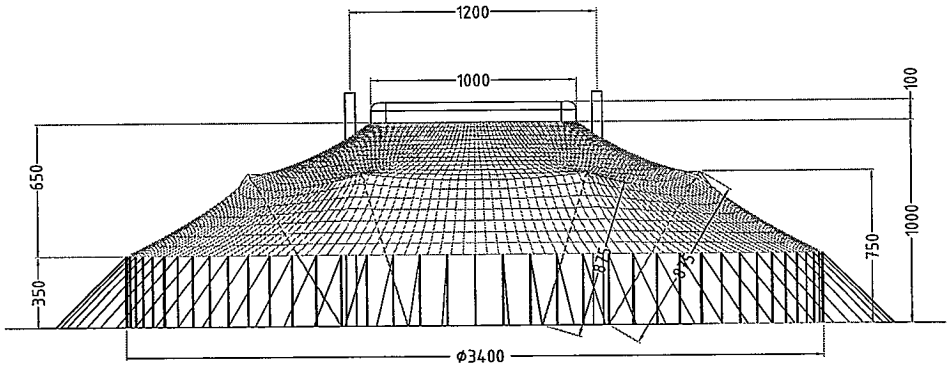

Vista laterale

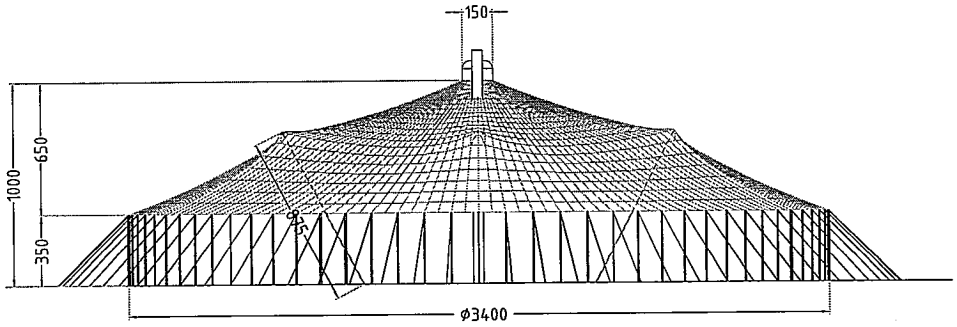

Pianta

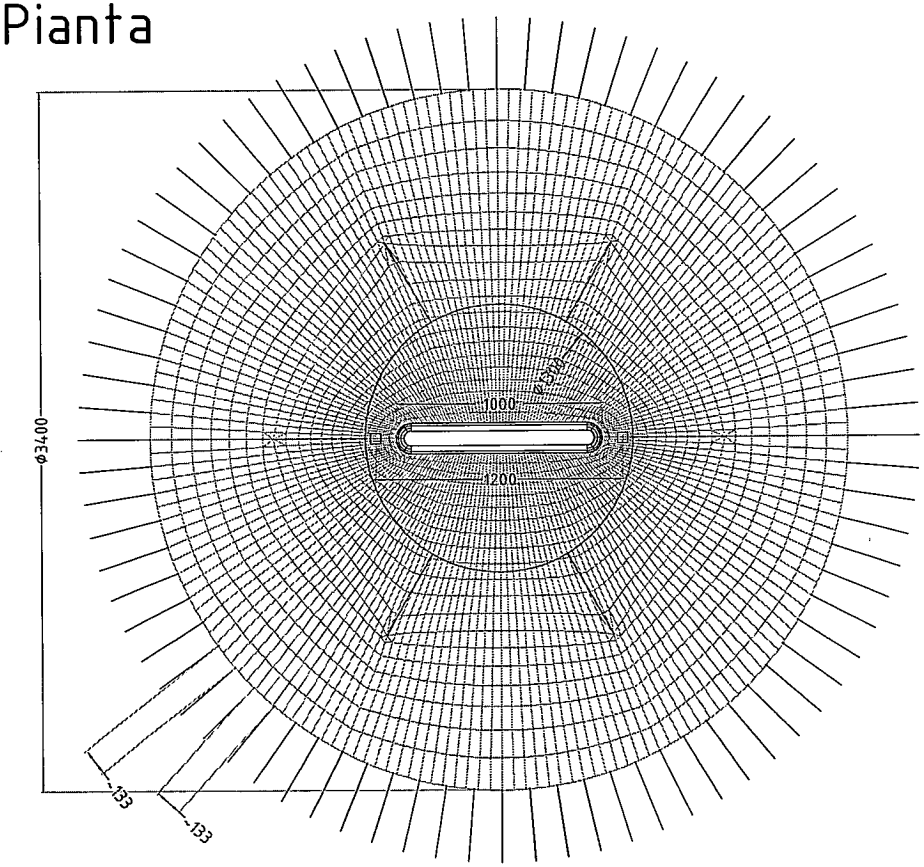

Vista assonometrica

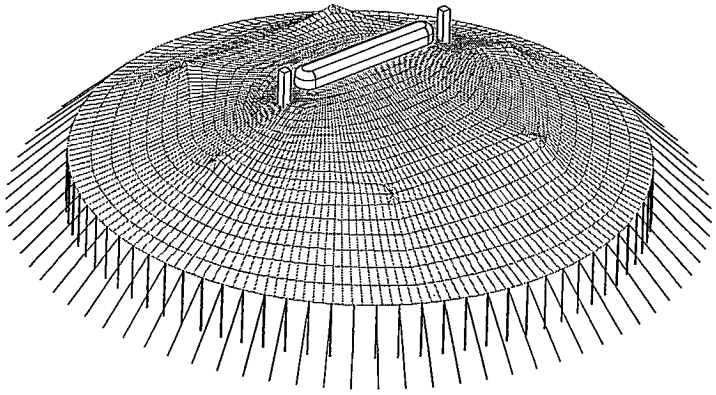

Circo ϕ34 6 contropali
Bassano del Grappa 14/01/2008
TC-08-008-104

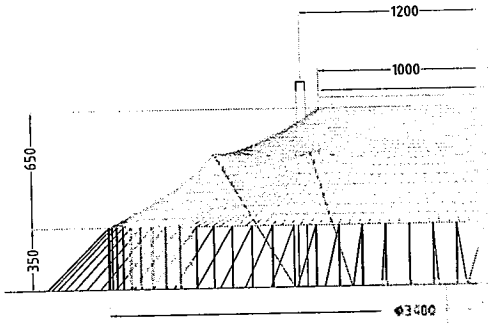

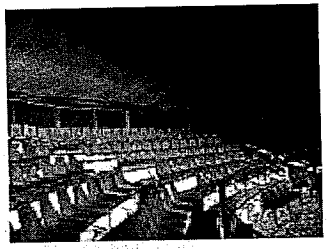

SEATING PLAN

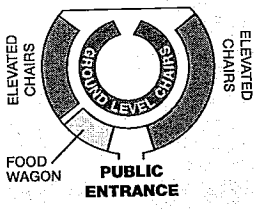

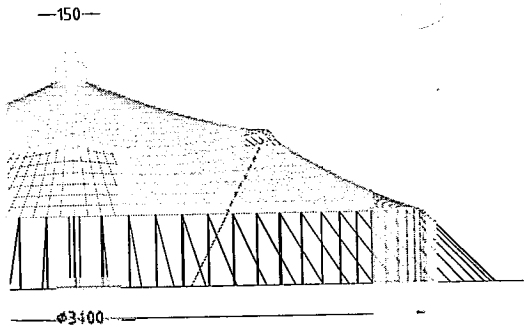

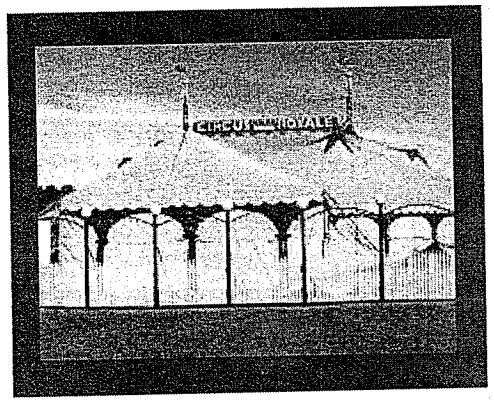

ELECTRIC FENCE

BARRIER FENCE 1m HIGH

2m

ELECTRIC - FENCED ANIMAL AREA

AWNING

SEMI-TRAILER

AWNING

HORSE STABLES

SEMI-TRAILER STABLE UNIT

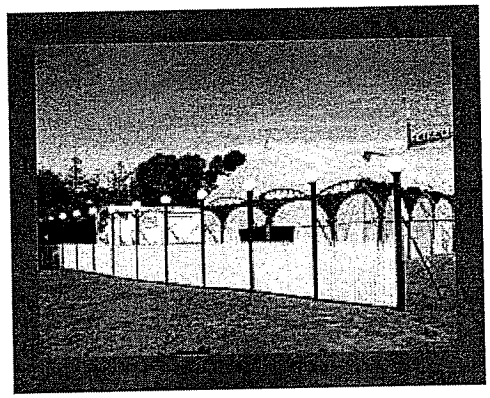

5m

NOT OPEN TO PUBLIC
PRIVATE CARAVANS/CIRCUS TRANSPORT VEHICLES & EQUIPMENT STORAGE

PERFORMERS ENTRANCE

EMERGENCY EXIT

BACKSTAGE

EMERGENCY EXIT

SIDEWALL

STAKE-LINE

ACTORS

34m

SEATING

CLOSE CHAIRS

SEATING

FOOD WAGON

NOT OPEN TO PUBLIC
PRIVATE CARAVANS/CIRCUS TRANSPORT VEHICLES & EQUIPMENT STORAGE

GENERATOR

TOILETS

TICKETS

OFFICE

PUBLIC ENTRANCE

EXIT SIGNS

FIRE EXTINGUISHERS

PUBLIC ACCESS AREAS

DECORATIVE FENCE

ALBAN

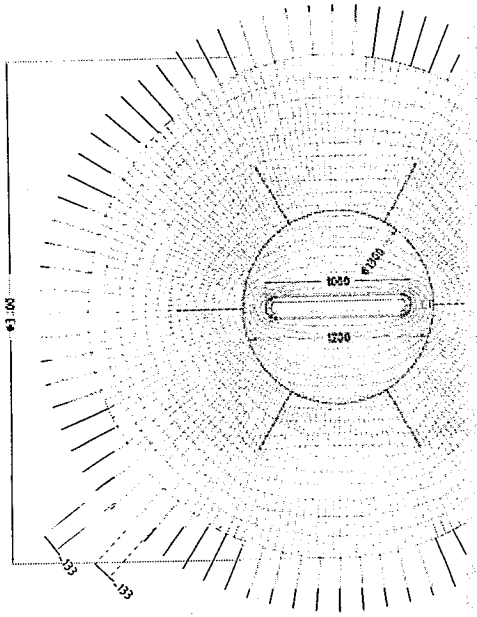

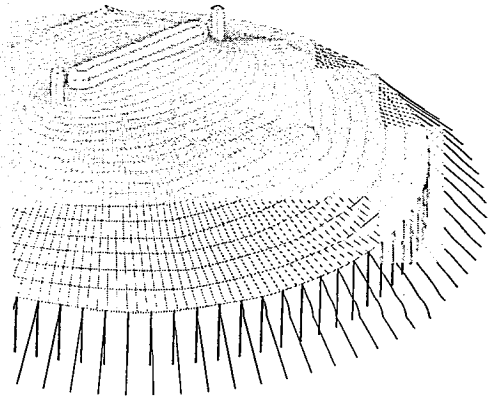

2009 - 2010
Layout Plan
34 Metre 2 Pole
Precontraint
702 Fabric

CIRCUS ROYALE
Alban Tent

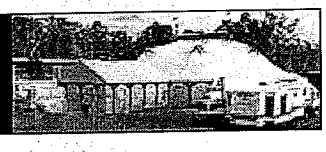

ANNEXURE "C"

STRUCTURAL DOCUMENTATION

COPY

FORM 13

Building Control Act 1993

BUILDING REGULATIONS 1994
Regulation 15.7 (2)

CERTIFICATE OF COMPLIANCE – DESIGN

To:

Building Surveyor:	Building Control Commission
Postal Address:	1 Lonsdale Street, Melbourne Vic 3000

From:

Building Practitioner:	Tim Gibney & Associates Pty Ltd
Category/Class:	Civil Engineer
Postal Address:	1/34 Rutland Road, Box Hill Vic 3128

Details:	CIRCUS TEMPORARY SEATING "CONTINENTAL STYLE SEATING"

I did prepare the design and I certify that the part of the design described as structural aspects only for the proposed ~~permanent~~ temporary seating complies with the following provisions of the Regulations: AS 1170 AS 1720 AS 4100

*BCA Volume 1 Clause B1.2(a) B1.2(b) B1.2(c)

Design Documents:

Drawings:	03154 – page 1 rev 0
Prepared by:	Tim Gibney
Date:	December 2002
Computations:	03154 Pages 115 1
Prepared by:	Tim Gibney
Date:	December 2002

Signature: Signed Building Practitioner:	Registration No. EC-1054

Date: 30th November, 2002

TIM GIBNEY & ASSOCIATES PTY LTD

Consulting Structural & Geotechnical Engineers

Suite 1
24 Rosland Road
P.O. Box 101
Box Hill Victoria 3128

Phone: (03) 9890 6333
Fax: (03) 9890 1633

E-mail: sample@email.com.au
ABN Nbr: 00 000

COPY

DATE: 25th November 2002

PROJECT: CIRCUS TEMPORARY SEATING
"CONTINENTAL STYLE SEATING"

CLIENT: CIRCUS ROYALE

PROJECT REFERENCE: 02154

PROJECT ENGINEERS: Tim Gibney

DESCRIPTION OF PROJECT: Structural Computations

CODES USED:

AS 1170	Loading codes
AS 1720.1	Timber Structures Code
AS 4100	Steel Structures Code

COMMENTS:

Building Commission
Place of Public Entertainment
Occupancy Permit No:
03/01
Issued Date
Expiry Date

TIM GIBNEY & ASSOCIATES Pty. Ltd. Page: 1

[illegible]

Engineer : Tim Gibney

Job : STRUCTURAL CHECK OF TEMPORARY SEATING [illegible]

© CADS Systems Pty. Ltd.

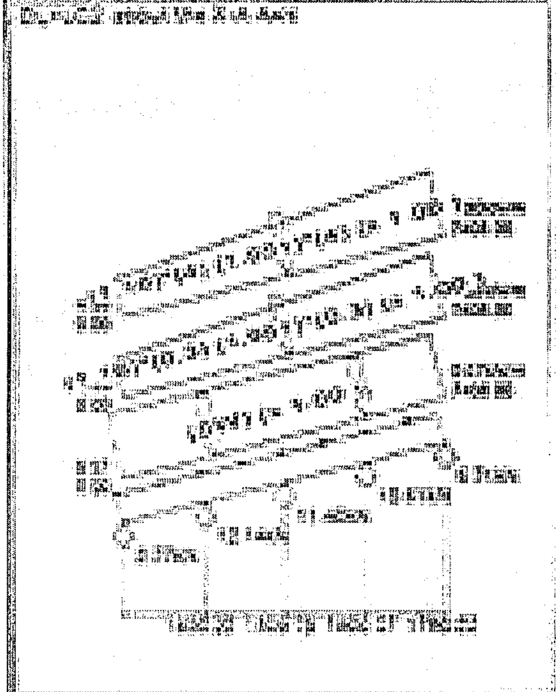

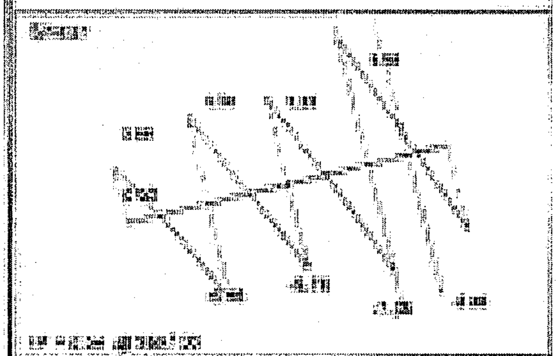

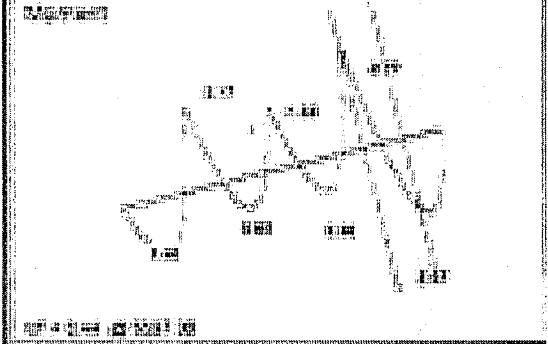

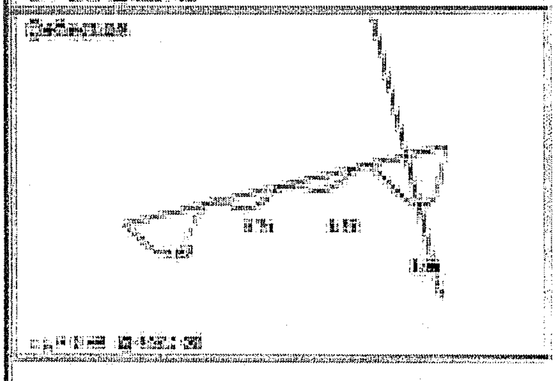

PLATFORM STRINGER

[illegible]

TIM GIBNEY & ASSOCIATES Pty. Ltd.

Consulting Structural Engineers

Suite 1, 151 Rokeby Road, HOBART TAS 7000

Phone (03) [illegible] Fax (03) [illegible]

email : [illegible]

Job : STRUCTURAL CHECK OF TEMPORARY WORKS

at MUSCUM

Page : 2

Date : [illegible]

Engineer : Tim Gibney

Reg. No. : [illegible]

Reference : [illegible]

[illegible] Systems Pty. Ltd.

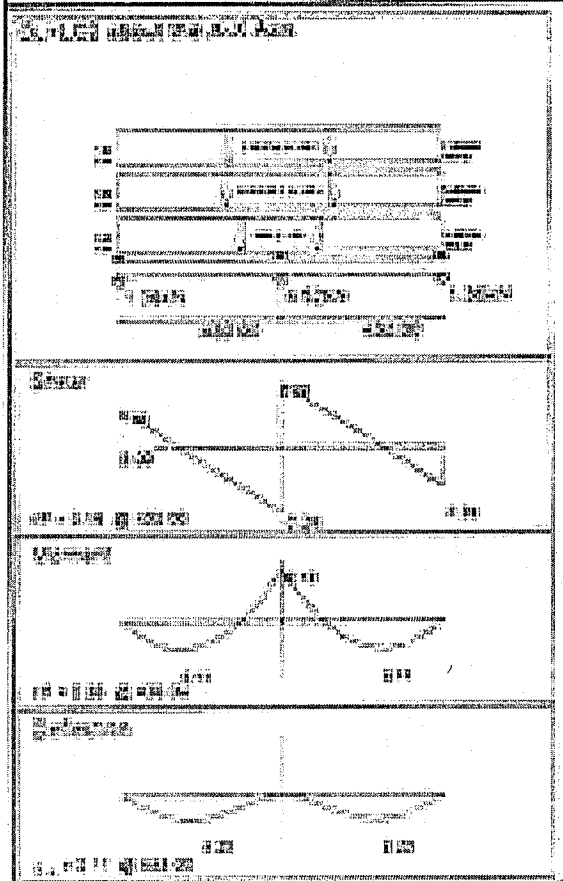

Note : [illegible] Floor Board Support Beam

[illegible]

Floor Board Support Beam

[illegible]

[illegible]	[illegible]	[illegible]	[illegible]
[illegible]	[illegible]	[illegible]	[illegible]

[illegible]	[illegible]	[illegible]
[illegible]	[illegible]	[illegible]

[illegible]	[illegible]	[illegible]
[illegible]	[illegible]	[illegible]

[illegible]	[illegible]	[illegible]
[illegible]	[illegible]	[illegible]

[illegible]	[illegible]	[illegible]
[illegible]	[illegible]	[illegible]

ADOPT : [illegible] Equal Angles for [illegible]

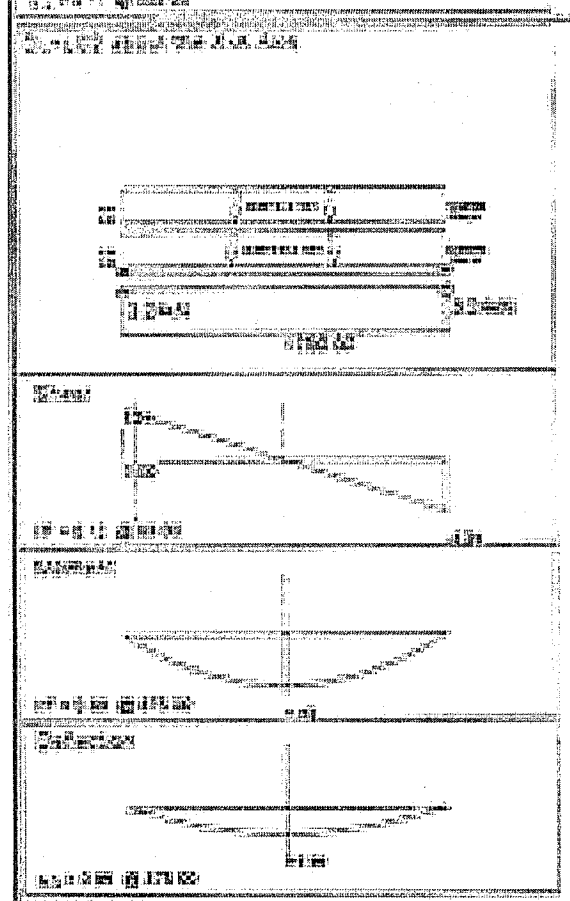

Note : [illegible] Floor Board

[illegible]

Floor Board

[illegible]

[illegible]	[illegible]	[illegible]
[illegible]	[illegible]	[illegible]

[illegible]	[illegible]	[illegible]
[illegible]	[illegible]	[illegible]

[illegible]	[illegible]	[illegible]
[illegible]	[illegible]	[illegible]

[illegible]	[illegible]	[illegible]
[illegible]	[illegible]	[illegible]

ADOPT : [illegible] Minimum Floor for [illegible]

[illegible]

TIM GIBNEY & ASSOCIATES Pty. Ltd.

Page: 3

Consulting Structural Engineers

Engineer: Tim Gibney

Reference: 0[illegible]

Job: INDUSTRIAL CHECK OF TEMPORARY DEATHS

Client: [illegible] Systems Pty. Ltd.

[illegible]

Mark: FD24 FLOOR BOARD

[illegible]

Mark: FD24 FLOOR BOARD

[illegible]

TIM GIBNEY & ASSOCIATES Pty. Ltd.

Page 4

Consulting Structural Engineers

Engineer: Tim Gibney

Reg. No.: EC-1234

Reference: 87194

Job: STRUCTURAL CHECK OF TIMBER FLOOR BOARD

Unit: FB1 FLOOR BOARD

Section Properties

Material Limits

Connection Capacities

Connection Capacities for Strength in Bending

Deflection

Section Capacities

Section Capacities for Strength in Bending

Deflection

Unit: SP1 SUPPORT POST

Section Properties

Material Limits

Connection Capacities

Connection Capacities for Strength in Bending

Deflection

Section Capacities

Section Capacities for Strength in Bending

Deflection

MEMBER SCHEDULE

Mark		Size Required	Description
FB1		35x89 [illegible]	FLOOR BOARD [illegible]
FB1A		35x89 [illegible]	FLOOR BOARD
FB3A		37x89 [illegible]	FLOOR BOARD
FB2		37x89 [illegible]	FLOOR BOARD
FB1		40x40x3 [illegible]	FLOOR BOARD SUPPORT [illegible] [illegible]
PS1		100x50x3 RHS [illegible]	PLATFORM STRUCTURE [illegible]
SP1		40x40x3 SHS [illegible]	SUPPORT POST [illegible]

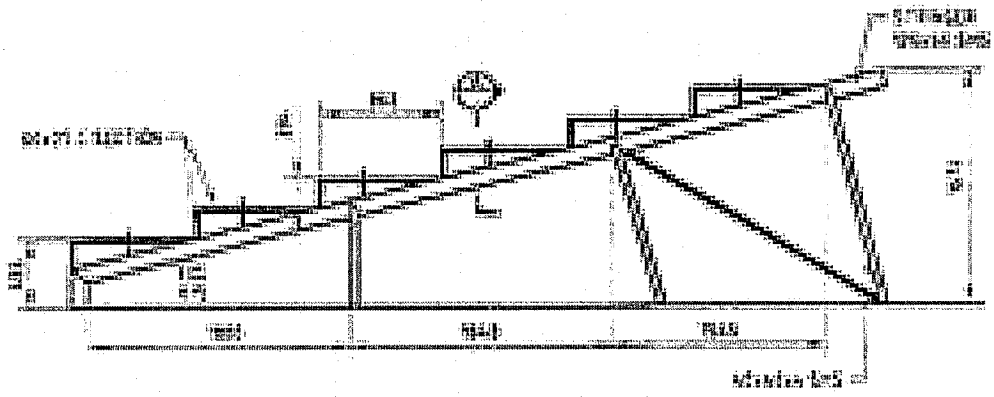

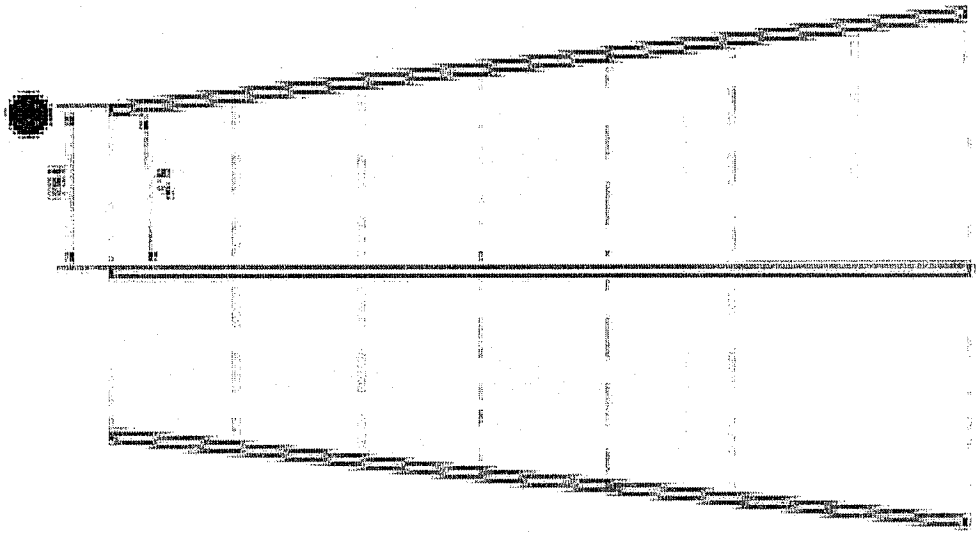

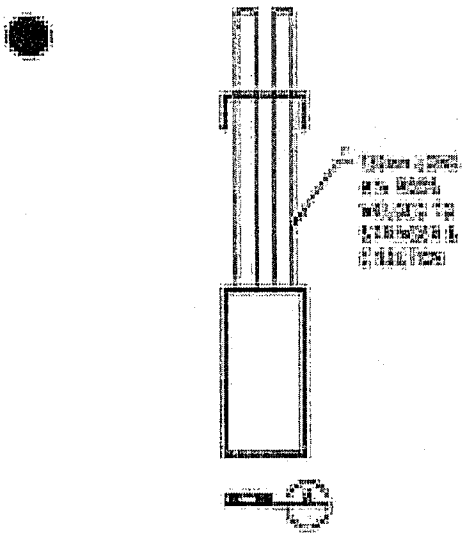

RELOCATABLE PUBLIC
SEATING
CIRCUS ROYAL

Consulting Structural &
Geotechnical Engineers
Suite 1
36 Burland Road
Box Hill Vic 3128
P.O. Box 301
Box Hill Vic 3128
ph 9890 0255
fax 9890 1523
email neighbs@xxx.net.au

TIM GIBNEY

		02154
		0

Certificate of Assessment

HF07ANK4933 No. 666

This is to certify that the specimen described below was tested by the CSIRO Division of Manufacturing and Infrastructure Technology in accordance with Australian/ New Zealand Standard 3837, Method of test for heat and smoke release rates for materials and products using an oxygen consumption calorimeter, 1998, at 50 kW/m², on behalf of:

Tissage Et Enduction Serge Ferrari
Zone Industrielle – BP 54
38352 la Tour du Pin Cedex
FRANCE

A full description of the test specimen and the complete test results are detailed in the Division's sponsored investigation report numbered FNK 0331.

SAMPLE IDENTIFICATION: Precontraint 702

DESCRIPTION OF SAMPLE: The sponsor described the tested specimen as polyester yarns coated with PVC on both sides and varnished. The PVC contained flame-retardant additives.

Nominal total thickness: 0.60mm Colour: White
Nominal total mass: 750 g/m²

SAMPLE CLASSIFICATION: Group Number: Group 1
(In accordance with Specification A2.4 of the Building Code of Australia.)

Average specific extinction area: 391.8 m²/kg
(Refer to Specification C1.10a section 3(c) of the Building Code of Australia.)

Testing Officer: Joanne Hofstadler Date of Test: 9 May 2005

Issued on the 18th day of May 2005 without alterations or additions.

Garry E Collins
Manager, Fire Testing and Assessments

NATA

This laboratory is accredited (Accreditation No. 3632) by the National Association of Testing Authorities, Australia. The tests reported herein have been performed in accordance with its terms of accreditation.

CSIRO

Improving the Built Environment

Building, Construction and Engineering
14 Julius Avenue, Riverside Corporate Park, Delhi Road, North Ryde NSW 2113 AUSTRALIA
Telephone: 61 2 9490 5444 Facsimile: 61 2 9490 5555

Certificate of Test

QUOTE No.: HF07ANF4225

REPORT No.: FNF1182

TEST FOR FLAMMABILITY OF MATERIALS IN ACCORDANCE WITH AS 1530.2-1993

TRADE NAME: FERRARI 702S BLOCKOUT FABRIC 8103

SPONSOR: Innova International Pty Ltd
36-40 Sunmore Close
MOORABBIN EAST VIC

DESCRIPTION OF SAMPLE: The sponsor described the specimen as a PVC coated polyester fabric with carbon interlayer.

Nominal total thickness: 0.65 mm
Nominal mass: 830 g/m²
Colour: white

TEST PROCEDURE: Six (6) samples were tested in accordance with Australian Standard 1530 Part 2 - Test for Flammability of Materials - 1993.

RESULTS: The following were obtained for the specimen:

	Maximum Flame Height	Time for Flame to Reach Top (t)	Area Under Curve (°C.min)
Mean	3.3	n/a	3.8
Coefficient of Variance (%)	12.87	n/a	14.94

From which the following indices were obtained:

SPREAD Factor	SPEED Factor	HEAT Factor	FLAMMABILITY INDEX
1	n/a	1	2

These test results relate only to the behaviour of the test specimens of the material under the particular conditions of test, and are not intended to be the sole criterion for assessing the potential fire hazard for the material in use.

DATE OF TEST: 20 October 2004

Issued on the 20th day of October 2004 without alterations or additions.

Janelle Sinclair
Testing Officer

Garry E Collins
Manager, Fire Testing and Assessments

This laboratory is accredited (Accreditation No. 3632) by the National Association of Testing Authorities, Australia. The tests reported herein have been performed in accordance with its terms of accreditation.

CSIRO

CSIRO Manufacturing & Infrastructure Technology
14 Julius Avenue, Riverside Corporate Park, North Ryde NSW 2113 AUSTRALIA
Telephone: 61 2 9490 5444 Facsimile: 61 2 9490 5555

AWTA TEXTILE TESTING

Australian Wool Testing Authority Ltd – trading as AWTA Textile Testing
A.B.N. 43 006 014 106
26 Robertson Street, Kensington, Victoria 3031
P.O. Box 240, North Melbourne, Victoria 3051
Phone (03) 9371 2126 Fax (03) 9371 2102

TEST REPORT

CLIENT : TISSAGE ET ENDUCTION SERGE
FERRARI SA
Z.1-BP54-38352 LA TOUR DU PIN
CEDEX FRANCE

TEST NUMBER : 7-516909-BO
DATE : 21/02/2003

SAMPLE DESCRIPTION CLIENTS REF: PRECONTRAINT 702 OPAQUE (BLACKOUT)
ARCHITECTURAL COATED PLASTIC COLOUR: WHITE
END USE: TEXTILE ARCHITECTURE

THESE RESULTS MUST BE CONSIDERED IN CONJUNCTION
WITH THE COMMENTS ON THE FOLLOWING PAGE(S)

MATERIAL SPECIFICATION PROVIDED BY CLIENT:
NOMINAL COMPOSITION: PES YARNS COATED WITH PVC FLAME RETARDANT ON BOTH SID ES AND VARNISHED
NOMINAL MASS: 830 g/m2 NOMINAL THICKNESS: 0.63mm

AS/NZS 1530.3 - 1999 SIMULTANEOUS DETERMINATION OF IGNITABILITY, FLAME PROPAGATION, HEAT RELEASE AND SMOKE RELEASE

RESULTS: FACE TESTED: BOTH SIDES

	MEAN		STANDARD ERROR
IGNITION TIME	3.25	min	0.11
FLAME PROPAGATION TIME	NIL	s	NIL
HEAT RELEASE INTEGRAL	49.5	kJ/m2	9.0
SMOKE RELEASE, LOG D	0.1055		0.0457
OPTICAL DENSITY, D	1.3091	/m	

NUMBER OF SPECIMENS IGNITED: 6

NUMBER OF SPECIMENS TESTED: 6

REGULATORY INDICES:			
IGNITABILITY INDEX	17	RANGE	0-20
SPREAD OF FLAME INDEX	0	RANGE	0-10
HEAT EVOLVED INDEX	1	RANGE	0-10
SMOKE DEVELOPED INDEX	8	RANGE	0-10

COMMENTS:

THESE RESULTS ONLY APPLY TO THE SPECIMEN MOUNTED, AS DESCRIBED IN THIS REPORT.

THE RESULTS OF THIS FIRE TEST MAY BE USED TO DIRECTLY ASSESS FIRE HAZARD, BUT IT SHOULD BE RECOGNIZED THAT A SINGLE TEST METHOD WILL NOT PROVIDE A FULL ASSESSMENT OF FIRE HAZARD UNDER ALL FIRE CONDITIONS.

124090 1 (CONTINUED NEXT PAGE)

This Laboratory is accredited by the National Association of Testing Authorities, Australia, for:
- Chemical Testing of Textiles & Related Products : Accreditation No. 983
- Mechanical Testing of Textiles & Related Products : Accreditation No. 985
- Heat & Temperature Measurement : Accreditation No. 1356

The tests reported herein have been performed in accordance with its terms of accreditation. Samples, and their identifying descriptions have been provided by the client unless otherwise stated. AWTA Ltd makes no warranty, implied or otherwise, as to the source of the tested samples. The above test results relate only to the sample or samples tested. This document shall not be reproduced except in full and shall be rendered void if amended or altered. This document, the names AWTA Textile Testing and AWTA Ltd may be used in advertising providing the content and format of the advertisement have been approved in advance by the Managing Director of AWTA Ltd.

AWTA LIMITED

0204/8/01

APPROVED SIGNATORY

MICHAEL A JACKSON B.Sc (Hons)
MANAGING DIRECTOR