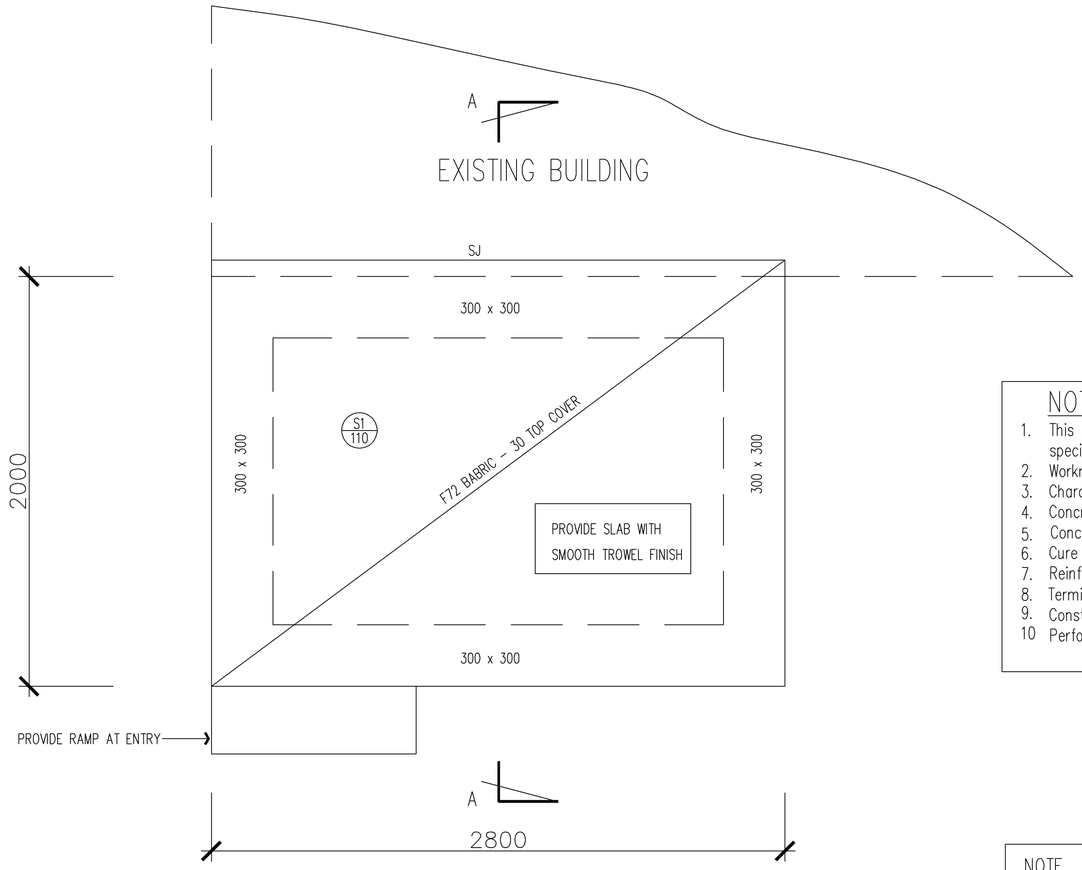

PLAN – SLAB EXTENSION

NOTES:

1. This drawing is to be read in conjunction with the Architectural Drawing No. 101 and specifications.
2. Workmanship and materials to comply with AS3600 and associated Australian Standards.
3. Characteristic concrete compressive strength in accordance with AS3600 to be 20MPa.
4. Concrete slump to be 100mm.
5. Concrete to be mechanically vibrated during placing.
6. Cure concrete by keeping constantly damp for at least 5 days after placing.
7. Reinforcement to be supported on bar chairs spaced at every 5th wire in both directions.
8. Termite protection to be in accordance with As3660.1 1995 and council requirements
9. Construction requirments and site maintenance outlined in As2870–1996 are to be followed.
10 Performance expectations set out in As2870–1996 Appendix B are acceptedable

NOTE

SJ – 10MM SILICONE STRAIGHT
JOINT. STOP FABRIC AT JOINT

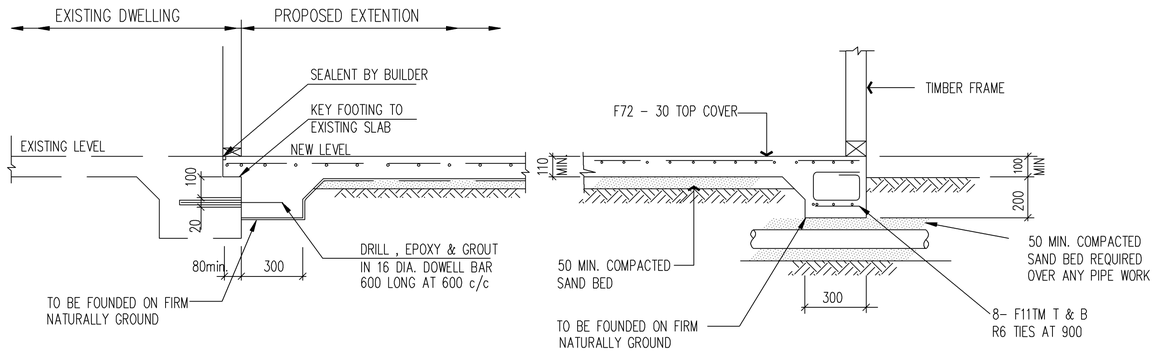

SECTION A–A

NOTES:

All engineering plans to be certified by a practicing structural engineer prior to approval of the construction certificate.

THESE DESIGNS, DRAWINGS, SPECIFICATIONS AND THE COPYRIGHT THEREIN ARE THE PROPERTY OF VIRBAC (AUSTRALIA) PTY.LTD
AND MUST NOT BE USED, REPRODUCED OR COPIED WHOLLY IN PART WITHOUT THE WRITTEN PERMISSION OF VIRBAC (AUSTRALIA) PTY.LTD.

No.	DATE	REVISION	DRN	CHK	APPRV

Virbac (AUSTRALIA) PTY LIMITED

TITLE
PENRITH SITE
SEED LAB 60.20A - CHANGE ROOM
SLAB DETAILS

DRN :	CHECKED:	DATE :	DWG. No	REV.
SS	MH	23/09/11	V-0970-A	A
APPROVAL: MH		SCALE : 1:20		

Document Set ID: 6126207
Version: 1, Version Date: 02/09/2014